OFFSET CENTERLINE VERNIER CALIPER

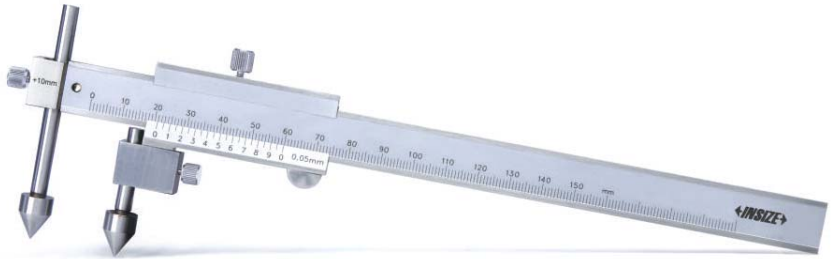

1292-1503

- Measure hole center distance in the same or offset planes
- Made of stainless steel
- Stain chrome plated reading surface

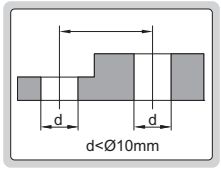

Graduation 0.02mm **(mm)**

Code	Range	Accuracy	L
1292-1501	10-150mm	±0.05mm	236
1292-2001	10-200mm	±0.07mm	246
1292-3001	10-300mm	±0.09mm	396

Graduation 0.05mm **(mm)**

Code	Range	Accuracy	L
1292-1503	10-150mm	±0.05mm	236
1292-2003	10-200mm	±0.07mm	246
1292-3003	10-300mm	±0.09mm	396
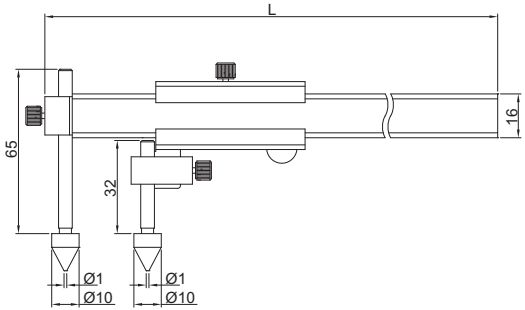
Unit: mm